NOTES: 1) THIS DWG. REPRESENTS A SUB-GROUP OF COMPONENTS WITHIN THE SEAKEEPER 18 COVER AND GUARD SYSTEM BILL OF MATERIAL AND DOES NOT NECESSARILY REPRESENT THE ACTUAL ASSEMBLY PROCEDURE. THIS DWG DOES PROVIDE TECHNICAL INFORMATION REGARDING COMPONENT LOCATION AND FASTENER APPLICATION.
2) ITEMS 1, 7, AND 8 ARE REMOVEABLE FOR INSTALLATION AND SERVICE WITH STAINLESS STEEL HARWARE. PAINTING THIS HARWARE IS NOT NECESSARY.
3) THREADLOCKER SHOULD BE APPLIED TO REMOVABLE COVERS.

REV NO.	ECN NO.	ZONE	DESCRIPTION	DATE	APPRVD.
1	0757		RELEASED FOR PRODUCTION	12/17/2019	WMG

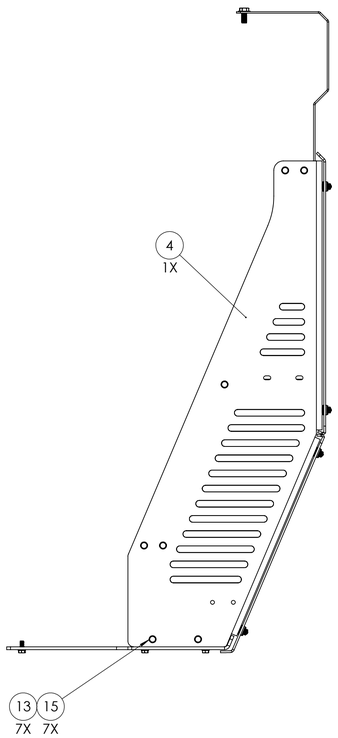

- APPLY SILI-THANE 803 MARINE SEALANT UNDER FLAT WAHSER,
- APPLY THREADLOCKER, LOC-TITE #243, BLUE TO SCREW THREADS
- **TORQUE EQUALLY TO 72 IN-LBS.**

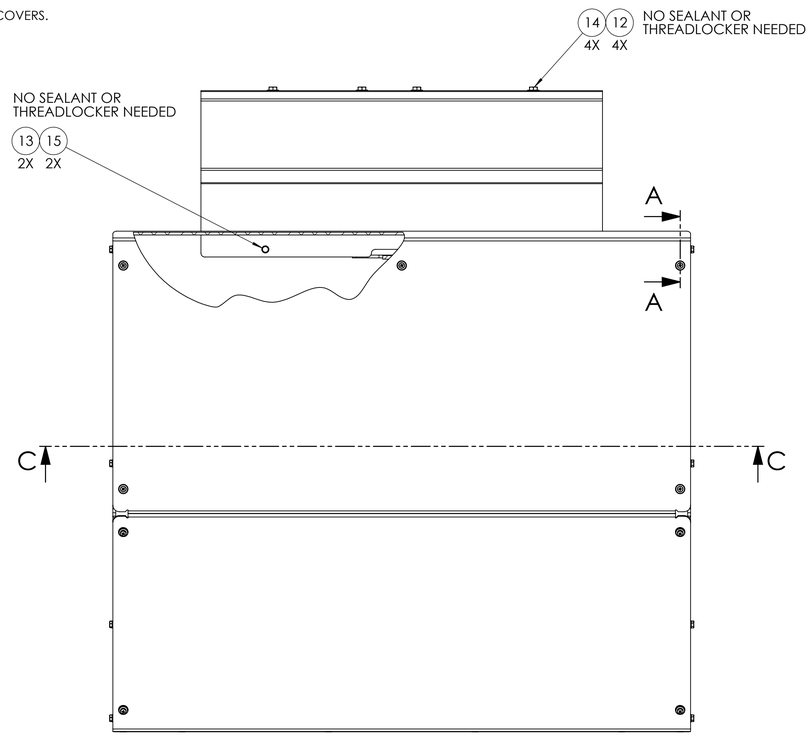

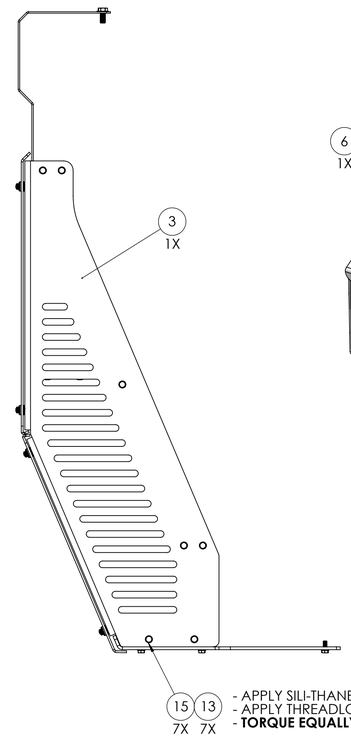

- APPLY SILI-THANE 803 MARINE SEALANT UNDER FLAT WAHSER,
- APPLY THREADLOCKER, LOC-TITE #243, BLUE TO SCREW THREADS
- **TORQUE EQUALLY TO 72 IN-LBS.**

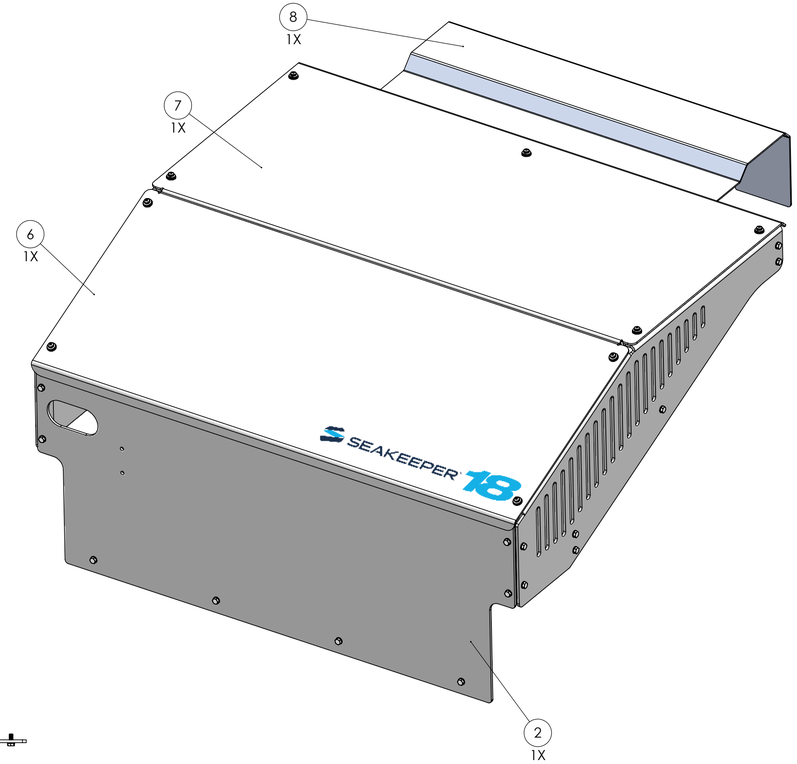

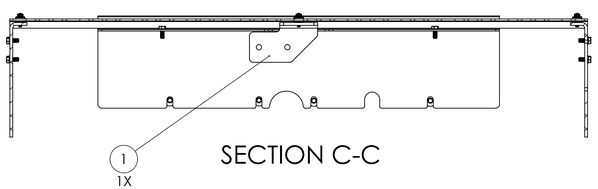

SECTION C-C

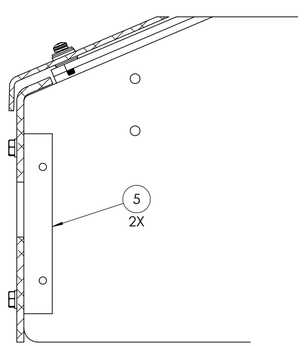

SECTION B-B

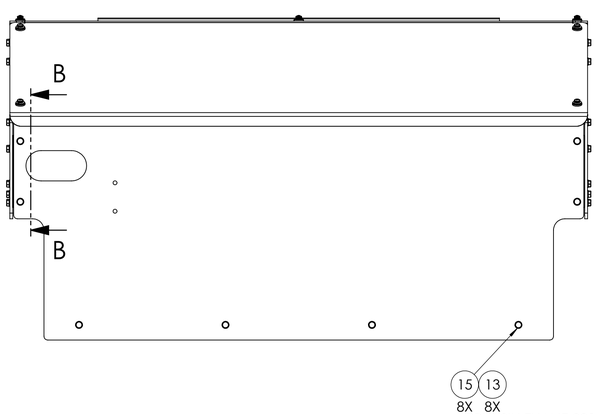

- APPLY SILI-THANE 803 MARINE SEALANT UNDER FLAT WAHSER,
- APPLY THREADLOCKER, LOC-TITE #243, BLUE TO SCREW THREADS
- **TORQUE EQUALLY TO 72 IN-LBS.**

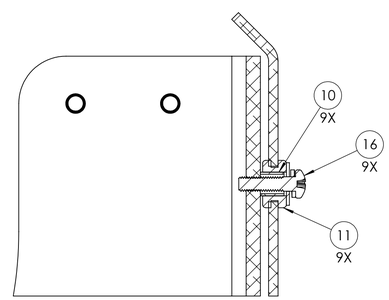

SECTION A-A

ITEM NO.	PART NO.	DESCRIPTION	MATERIAL	QTY.	NOTE
17	70054	THREADLOCKER, LOC-TITE #243, BLUE	---	AR	
16	60263	PAN HD PHILLIPS SCREW, INTEGRATED WASHERS 10-32 X 3/4"	18-8 SS	9	
15	60256	HEX HEAD CAP SCREW, M6-1.0 X 16mm LG	316 SS	24	
14	60246	HEX HD CAP SCREW M8-1.25 X 20mm LG. 316SS	316SS	4	
13	60223	WASHER, FLAT, M6 12MM OD	316SS	24	
12	60003	WASHER, FLAT TYPE B NARROW 0.31	316 SS	4	
11	40342	RUBBER GROMMET, .31 ID X .62 OD X .31 THK.	NITRILE RUBBER	9	
10	40341	ALUMINUM SLEEVE BUSHING	6061-T6 ALUM	9	
9	40250	SILI-THANE 803 MARINE SEALANT	---	AR	
8	12267	SEAKEEPER 18 REAR UTILITY COVER	ALUM. SHEET 5052	1	
7	12216	SEAKEEPER 16 TOP COVER PANEL	ALUM. SHT.	1	
6	12153	SEAKEEPER 18 FACE PANEL WITH LOGO	ALUM. SHEET	1	
5	11176	SEAKEEPER 16 CORNER SUPPORT BLOCK	6061-T6 ALUM. BAR	2	
4	11174	SEAKEEPER 16 COVER SUPPORT RISER, RIGHT SIDE	5052 ALUM. SHEET	1	
3	11173	SEAKEEPER 16 COVER SUPPORT RISER, LEFT SIDE	5052 ALUM. SHEET	1	
2	11167	SEAKEEPER 16 FRONT PANEL	5052 ALUM. SHEET	1	
1	11166	SEAKEEPER 16 TOP COVER SUPPORT BRACKET	5052 ALUM SHEET	1	

PROPRIETARY AND CONFIDENTIAL

THE INFORMATION CONTAINED IN THIS DRAWING IS THE SOLE PROPERTY OF SEAKEEPER INCORPORATED. ANY REPRODUCTION IN PART OR AS A WHOLE WITHOUT THE WRITTEN PERMISSION OF SEAKEEPER IS PROHIBITED.

SEAKEEPER
Seakeeper Inc. 45310 Abell House Lane, Suite 350 California, MD 20619

WEIGHT - LBS : ---	NAME: SEAKEEPER 18 COVERS SUB-SYSTEM SERVICE REFERENCE		
MATERIAL: ---	DRAWN: WMG	DATE: 15AUG2019	
	ENG APPR: WHK	DATE: 15AUG2019	
	PROD APPR: ---	DATE: ---	
	DWG NUMBER: 12192-SP	REV. NO.: 1	SHEET NO.: 1 OF 1