REV.	ECN NO.	ZONE	DESCRIPTION	DATE	DRAWN	APPROVED
1	908		INITIAL RELEASE	18NOV2021	ZGY	TMD
2	908	C4, F4, F7	REMOVED CONNECTBOX COMPONENTS. ADDED 5" DISPLAY 30298. REPLACED 20394 ROUND AC POWER CABLE WITH FLAT 20542. REPLACED RESERVOIR SPACER 60758 WITH 60927.	22AUG2022	RMF	ZGY

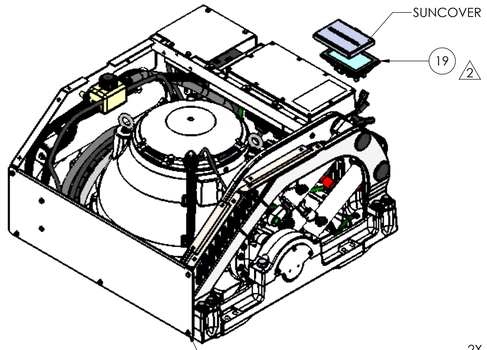

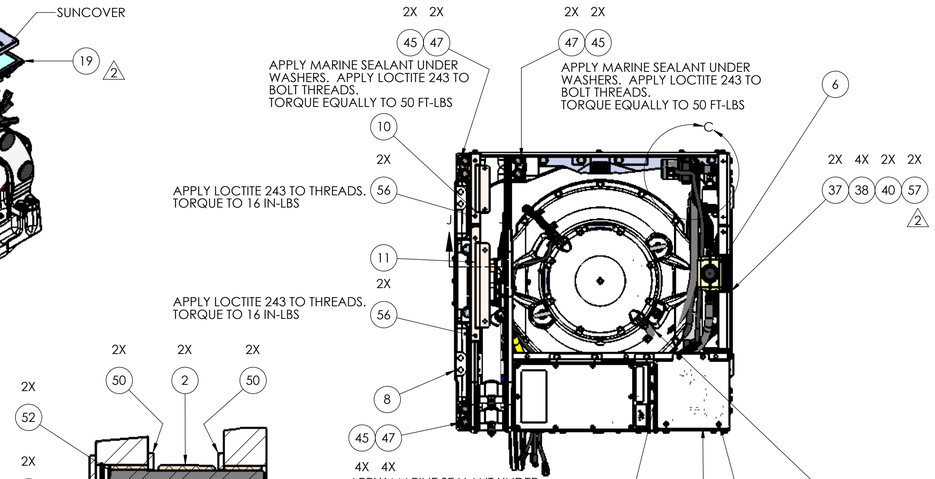

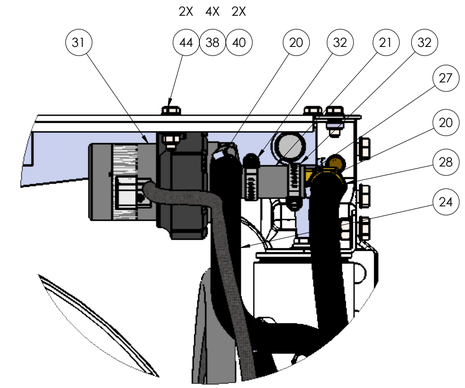

DETAIL C
SCALE 1 : 2

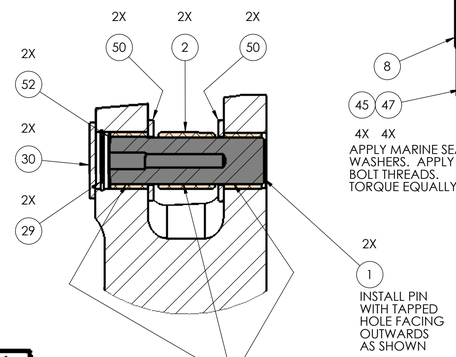

SECTION J-J
SCALE 1 : 1

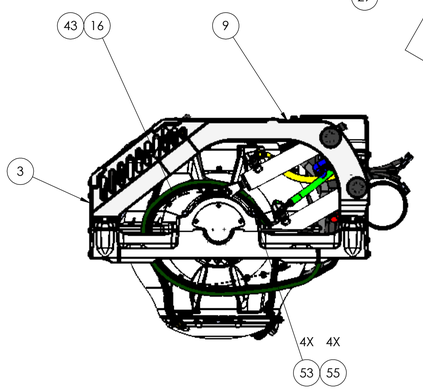

REMOVE TEMPORARY HARDWARE AND
REPLACE WITH ITEMS SHOWN. APPLY
ANTI-SEIZE TO BOLT THREADS. APPLY
MARINE SEALANT UNDER WEDGE LOCK
WASHERS. TORQUE EQUALLY TO 140 FT-LBS.
(BOTH SIDES)

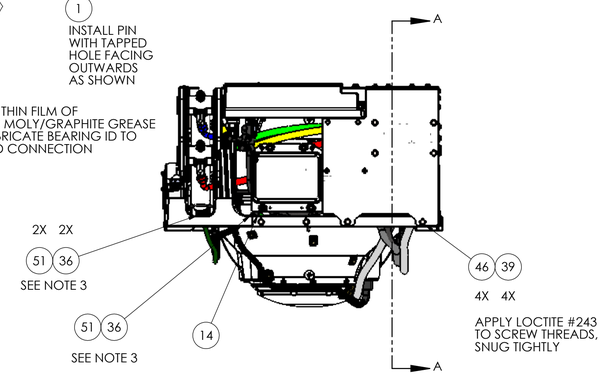

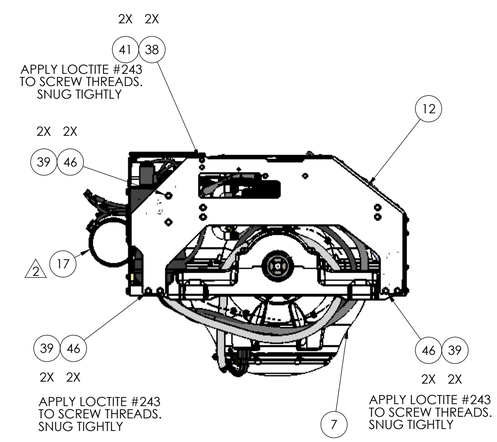

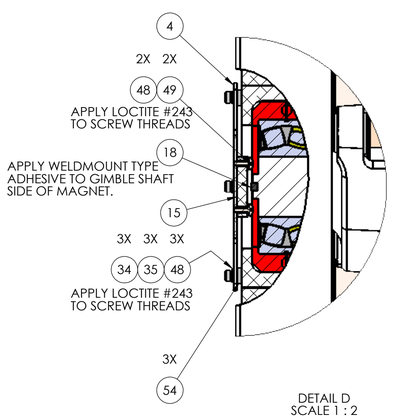

DETAIL D
SCALE 1 : 2

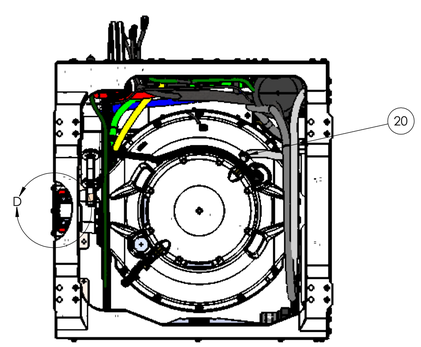

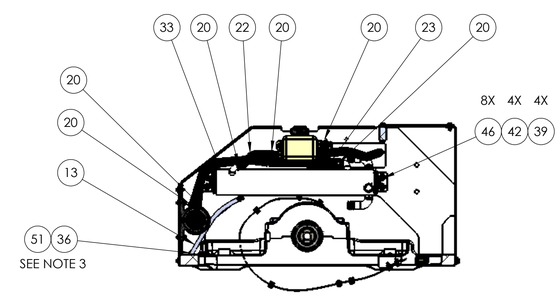

SECTION A-A

NOTES:

1) ENSURE ALL HOSES ARE FREE OF DIRT, DEBRIS, AND PORT PLUGS ARE REMOVED BEFORE MAKING CONNECTIONS.
2) APPLY THREADLOCKER ACCORDING TO SEAKEEPER WORK INSTRUCTION WI-085
3) APPLY ANTI-OXIDENT COMPOUND TO ALL GROUNDING BOLTS. REMOVE PAINT UNDERNEATH GROUNDING LUG. TOOTH LOCK WASHER MAY BE USED UNDER GROUND WIRE LUG IF THE LUG DOES NOT SIT FLAT ON THE MATING SURFACE.

ITEM NO.	PART NO.	DESCRIPTION	QTY.
62	70079	GREASE, MOLY/GRAPHITE NLGI GRADE 2	AR
61	70078	ANTI-OXIDANT COMPOUND	AR
60	70054	THREADLOCKER, LOCTITE #243, BLUE	AR
59	70029	CORROSION RESISTANT CONDUCTIVE PASTE	AR
58	70002	ANTI-SEIZE COMPOUND - NICKEL BASE	AR
57	60927	SPACER, UNTHREADED, 1/2" OD X .257" ID X 11/16" LONG, OFF-WHITE NYLON	2
56	60851	SOCKET HEAD CAP SCREW LOW PROFILE 10-32 X 1/2" LONG FULL TD, SS316	4
55	60579	HEX HD CAP SCREW, M16-2 X 80MM LG, GRD 10.9, ALUM ZNC PLTD STEEL	4
54	60476	STANDOFF, ROUND, M4 X 10MM OD, 5MM LG	3
53	60456	WASHER, WEDGE LOCK, 5/8 AND M16, .67 ID X 1.0 OD	4
52	60448	SHIM, ROUND, 12MM ID X 18MM OD X .5MM THK	2
51	60352	SCREW, HEX HD CAP M6-1.0 X 12MM FULL TD	5
50	60348	WASHER, GENERAL PURPOSE FLAT 0.63 1.07 OD	4
49	60344	SCREW, PHILLIPS HD PAN M4-.7 X 10MM FULL TD	2
48	60343	WASHER, FLAT DIN125 M4	5
47	60331	WASHER, FLAT DIN125 M12	8
46	60330	WASHER, FLAT DIN125 M8	18
45	60326	SCREW, HEX HD CAP M12-1.75 X 55MM	8
44	60321	SCREW, HEX HD CAP M6-1.0 X 25MM FULL TD	2
43	60276	INTERNAL TOOTH LOCK WASHER, 5/16" SCREW SIZE	1
42	60267	HEX NUT, NYLOK M8-1.2 SS	4
41	60256	HEX HEAD CAP SCREW, M6-1.0 X 16mm LG	11
40	60255	HEX NUT, NYLOK M6-1.0	4
39	60246	HEX HD CAP SCREW M8-1.25 X 20mm LG. 316SS	14
38	60223	WASHER, FLAT, M6 12MM OD	19
37	60222	SCREW, HEX HD CAP M6-1.0 X 35MM 316SS	2
36	60096	WASHER, SPLIT LOC .25 ID	5
35	60037	SPRING LOCK WASHER, M4	3
34	60034	SCREW, SOCKET HD CAP M4-.7 X 16MM FULL TD	3
33	40706	SEAKEEPER 6 HEAT EXCHANGER W/O THERMOSTAT	1
32	40607	HOSE CLAMP, SIZE 8, 1/2" to 29/32" Dia.	2
31	40434	COOLING PUMP, 12VDC, .625 INLET X .5 OUTLET, WATERPROOF	1
30	40411	NG5 BRAKE PIN COVER	2
29	40354	RETAINING RING, INTERNAL, .75	2
28	40289	HOSE BARBER ADAPTER, 1/2" HOSE ID X .5" NPTF FEMALE PIPE	1
27	40256	90 DEG ELBOW, 5/8" HOSE ID X 1/2" NPT MALE PIPE	1
26	40250	SILI-THANE 803 MARINE SEALANT	AR
25	40223	COOLANT HOSE, 1/2" ID x 77" LG, WATERJACKET TO HE	1
24	40223	COOLANT HOSE, 1/2" ID X 29" LG, PUMP TO DRIVE	1
23	40223	COOLANT HOSE, 1/2" ID x 20" LG, HE TO PUMP	1
22	40223	SK 5-6 COOLANT HOSE, .5 ID, RESERVOIR TO HEAT EXCHANGER	1
21	40199	COOLANT HOSE, .625" ID x 2" LG, ADAPTOR TO PUMP	1
20	40026	HOSE CLAMP, SIZE 06, 7/16"-25/32" CLAMP ID, 5/16" BAND WIDTH	9
19	30298	5 INCH TOUCH DISPLAY, GYRO CONTROLLER	1
18	30248	POSITION MARKER (MAGNET ONLY)	1
17	20542	AC INPUT POWER 10/3 FLAT CABLE ASSEMBLY	1
16	20338	ENCLOSURE GROUND CABLE ASSEMBLY	1
15	20330	SMALL MODEL SEAKEEPER GIMBAL ANGLE SENSOR	1
14	20241	SK5 MOTOR DRIVE, GROUND CABLE ASSEMBLY	1
13	20228	GROUND CABLE, 10AWG, 13"	1
12	12627	SEAKEEPER 5-6 SIDE PANEL	1
11	12625	SEAKEEPER PANEL MOUNTING PLATE	1
10	12624	SEAKEEPER PANEL MOUNTING PLATE	1
9	12613	SEAKEEPER 5/6 UPPER FOUNDATION ASSEMBLY	1
8	12612	SEAKEEPER 5-6 FRAME ASSEMBLY	1
7	12611	SEAKEEPER 5/6 ENCLOSURE & GIMBAL SHAFT ASSEMBLY	1
6	12431	SEAKEEPER 6/9 COOLANT RESERVOIR	1
5	12164	SK6 MANIFOLD COVER PANEL, RECTIFIED MANIFOLD	1
4	11657	SK6 ANGLE SENSOR MOUNT	1
3	11638	SK6 FRONT PANEL	1
2	10934	ROD END BUSHING .750 OD X .625 ID X .75 LONG, BUNTING	2
1	10932	NG5 PIN, BRAKE CRANK	2

PROPRIETARY AND CONFIDENTIAL
THE INFORMATION CONTAINED IN THIS DRAWING IS THE SOLE PROPERTY OF SEAKEEPER INCORPORATED. ANY REPRODUCTION IN PART OR AS A WHOLE WITHOUT THE WRITTEN PERMISSION OF SEAKEEPER IS PROHIBITED.

THIS DRAWING SUPERSEDES ALL OTHER FILE FORMAT TYPES UNLESS OTHERWISE SPECIFIED

DO NOT SCALE DRAWING

3rd ANGLE PROJECTION

WEIGHT - LBS : ---

MATERIAL: ---

SEAKEEPER

Seakeeper Inc. 45310 Abell House Lane, Suite 350 California, MD 20619

DESCRIPTION: SEAKEEPER 5/6 TOP LEVEL GYRO ASSEMBLY, SERVICE REFERENCE

DRAWING NO:	REV NO:	SCALE:	SHEET NO:
12614-SP	2	1:8	1 OF 1