SEAKEEPER®

OPERATION MANUAL

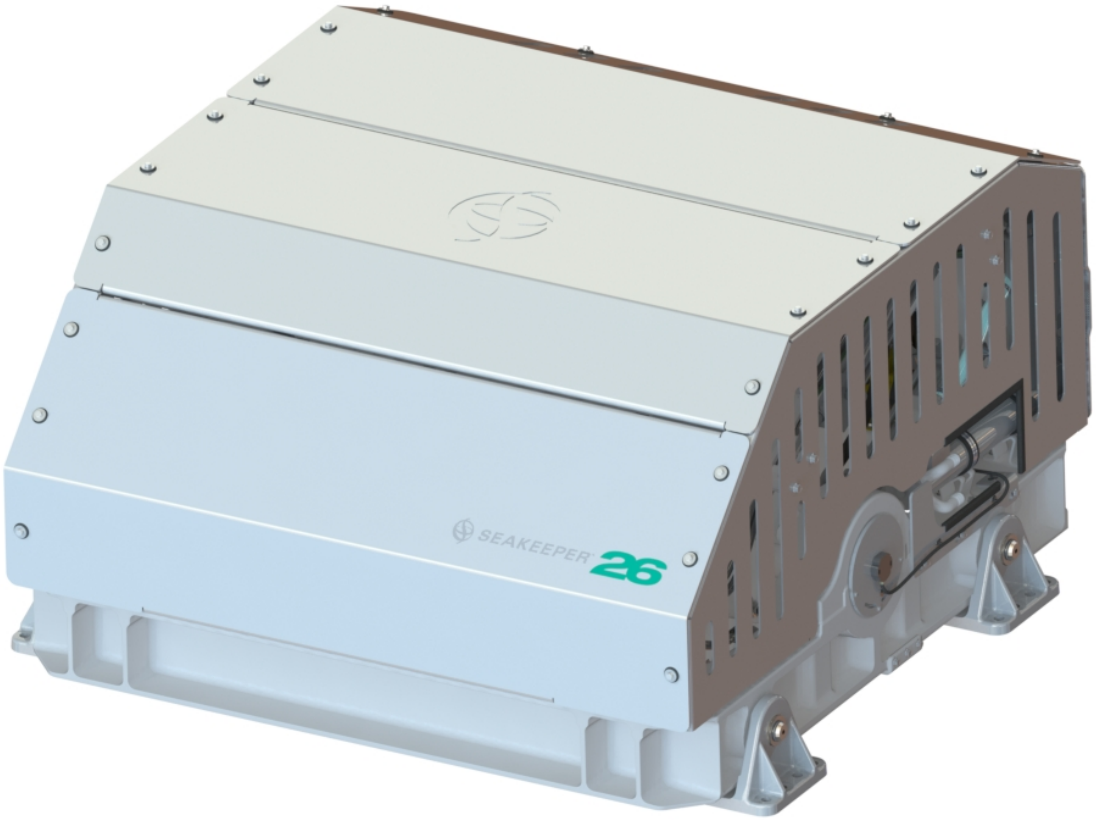

SEAKEEPER 26 GYRO

THIS MANUAL COVERS SEAKEEPER 26 MODELS
SERIAL NUMBERS 26-0001 THROUGH 26-0024

Rev 1 NOVEMBER 2014

PAGE INTENTIONALLY LEFT BLANK

SEAKEEPER 26 GYRO

OPERATION MANUAL

NOVEMBER 2014

Contents:

Section 1 – System Overview

Section 2 – System Operation

Section 3 – Power Failures, Alarms, and Troubleshooting

Section 4 – Maintenance

Section 5 – Warranty, Limit of Liability, Property Rights

Section 6 – Gyro Specs and Summary

SEAKEEPER®

44425 PECAN COURT, SUITE 151

CALIFORNIA, MARYLAND, 20619, U.S.A

PHONE: 410-326-1590

FAX: 410-326-1199

E-MAIL: customerservice@seakeeper.com

PAGE INTENTIONALLY LEFT BLANK

1.0 System Overview

The Seakeeper 26 Gyro uses gyroscopic principles to reduce boat roll motions in waves and wakes independent of boat speed. In multiple gyro installations, the gyros operate independently of each other and therefore this manual only discusses operation of a single unit.

A Seakeeper 26 Gyro consists of a Gyro assembly, a CAN communications cable, and a Display. Figure 1 illustrates the interconnection of these components and their interface with the boat.

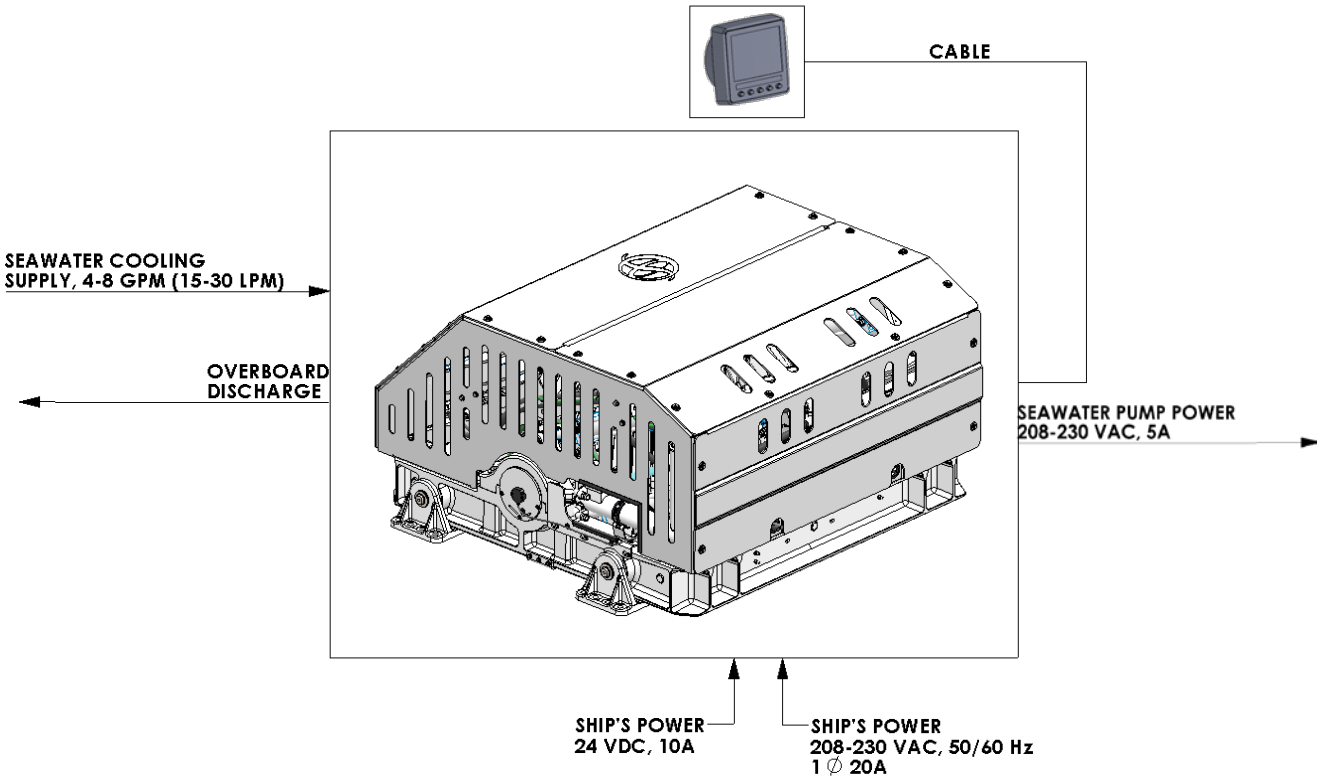

FIGURE 1 – SEAKEEPER 26 GYRO STABILIZATION SYSTEM COMPONENTS

Technical specifications provided in Section 6 list the power consumption, total weight, and dimensions of the major components. Gyroscopic principals that apply to boat roll control are discussed on Seakeeper's web site at www.seakeeper.com. The Seakeeper web site also contains videos of gyro operation and videos of several different boats operating in waves with the Gyro on and off. It is recommended that the reader play these videos prior to reading the remainder of this manual.

The gyro's gimbal angle and the gyro's rate of rotation about the gimbal axis (termed precession rate) play an important role in its operation. These parameters are illustrated in Figure 2. At zero degree gimbal angle, the gyro is vertical; it can precess a maximum of +/- 60 degrees about this position. The amount of torque that the gyro exerts on a boat's hull to counter the wave induced roll is directly proportional to the precession rate. The further the gyro is from vertical (zero degrees) the lower the anti-roll torque. The vertical arrows in Figure 2 illustrate the direction of the forces that the gyro exerts on the boat's hull to damp roll motion.

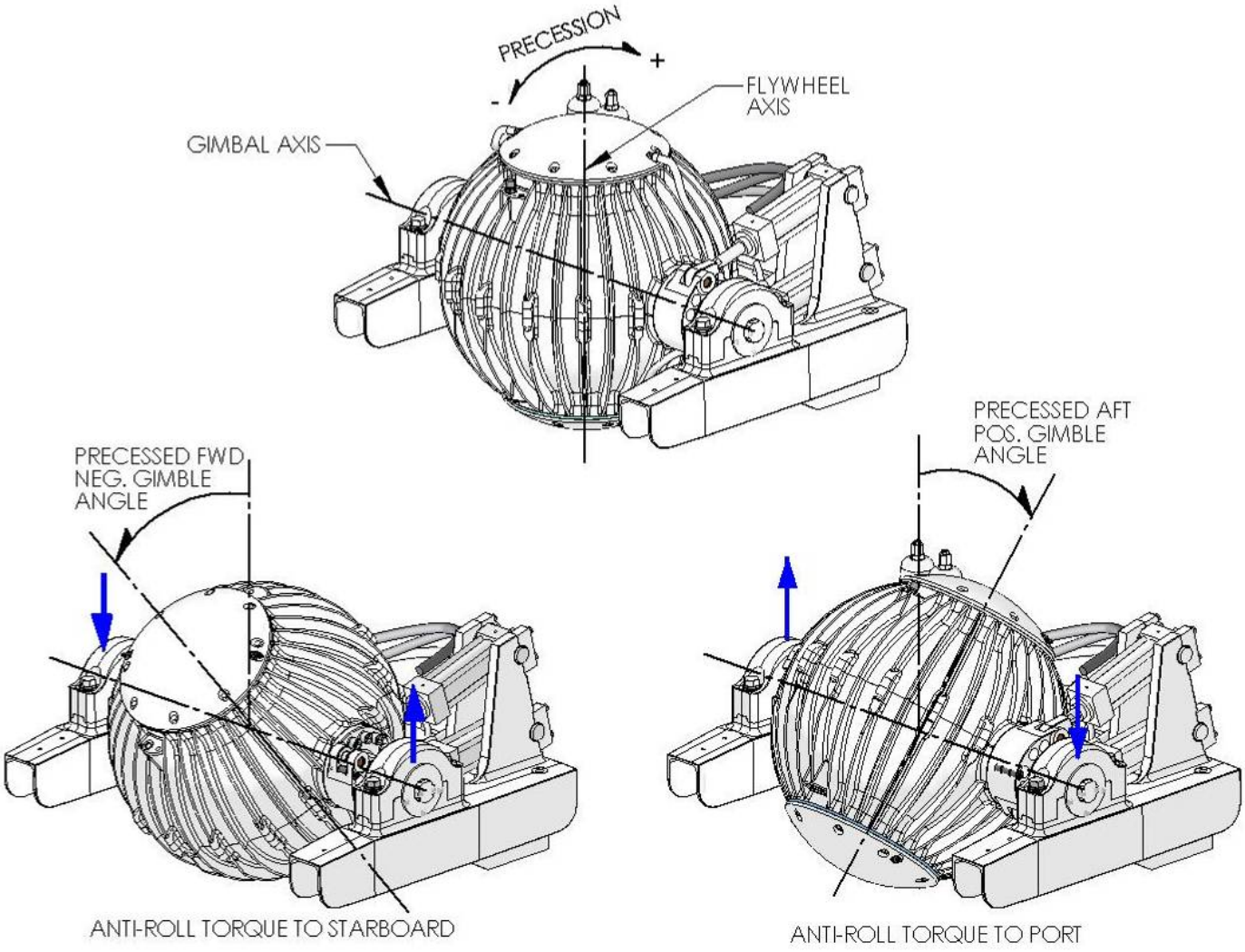

FIGURE 2 – GYRO PRECESSION

Seakeeper gyro precession is actively controlled by an electronic controller and a hydraulic brake throughout each roll cycle so the gyro supplies the maximum anti-roll torque and does not make mechanical contact with hard stops that limit the maximum gimbal angle travel to +/- 60°.

There is a large torque about the gimbal axis when the gyro is precessing. Gyro cover panels are provided to prevent personnel or equipment from contacting the gyro while it is in operation. These covers should not be stood on, or have anything placed on top. The covers should always be in place during operation. If it is ever necessary to touch the gyro while the flywheel is spinning, the gyro must be locked at the display to stop the gyro from precessing. Gyro maintenance should not be attempted unless the gyro is locked and the flywheel has stopped spinning.

1.1 Gyro Assembly

The gyro assembly consists of a flywheel housed in a cast aluminum vacuum-tight enclosure. The flywheel spins about a vertical axis and is supported by upper and lower pairs of bearings. A DC brushless motor mounted inside the enclosure spins the flywheel at high speed.

The enclosure is fastened to two gimbal shafts that are supported by gimbal bearings on either side. These shafts establish an athwart ship gimbal axis about which the flywheel and enclosure precess or rotate up to +/- 60 degrees during operation. The gimbal bearings are supported by a foundation which is attached to the hull structure. This foundation transfers the loads that the gyro produces to the hull structure.

An active hydraulic brake mechanism is located on the gyro assembly to regulate the gyro's precession motions about the gimbal shaft. It includes four hydraulic cylinders and a hydraulic manifold.

A coolant pump, heat exchanger with reservoir, and thermostat are located near the manifold. A glycol/water mix is circulated through a closed loop to the motor drive box, hydraulic manifold, and the waterjackets of the enclosure to remove heat.

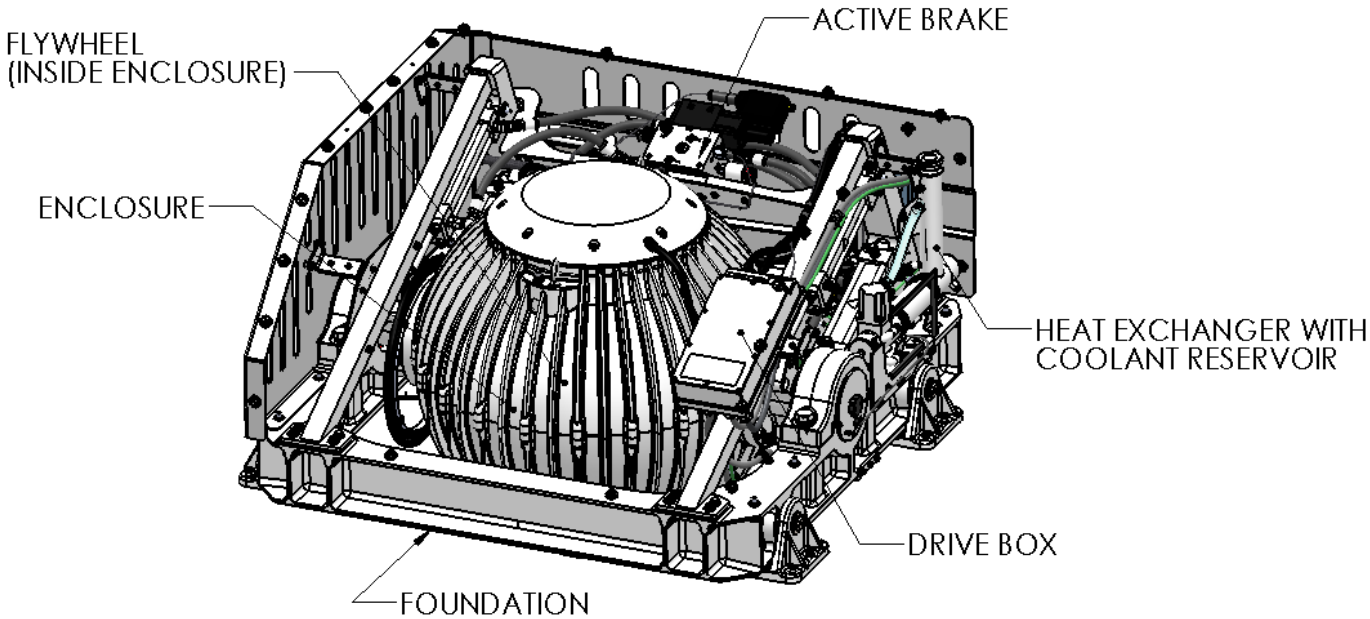

FIGURE 3 – GYRO ASSEMBLY

1.2 Display

The display shown below is the user interface to the Seakeeper 26 Gyro and should be mounted at the primary helm station. It is used to start, operate, monitor and shutdown the gyro. Sensors, alarms and shutdowns are provided to allow unattended operation. However the gyro is a high-speed machine and special attention should be paid to vibration and noise as this could be the first hint of a mechanical problem.

The display provides information in the event of an alarm. Alarms cause precession to stop (LOCK) and the gyro to start coasting down (STOP).

FIGURE 4 – OPERATOR DISPLAY

1.3 Drive Box

The Drive Box contains the electronic components that take 208-230 VAC at 50/60 Hz from the boat's generator or shore power and supply current to the flywheel motor according to commands from the Electronic Control Module (ECM). The glycol/water mix that cools the gyro is also circulated through a cold plate inside the Drive Box to remove heat from high-power electronic components.

The Drive Box contains high voltage electronics and the cover should not be removed while the flywheel is spinning except by an authorized technician. This high voltage exists even if the flywheel is coasting down and the supply voltage has been shut off.

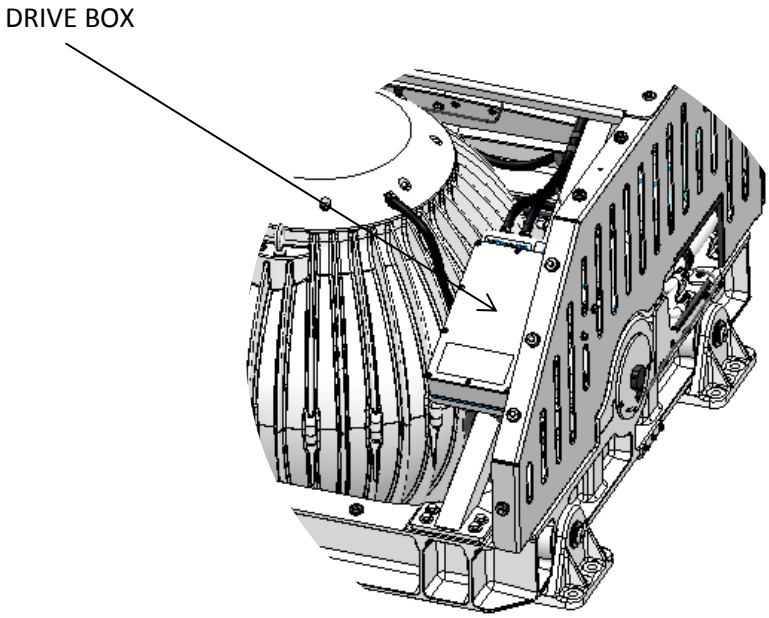

FIGURE 5 – DRIVE BOX

1.4 Electronic Control Module

The Electronic Control Module (ECM) monitors all the system sensors and automatically regulates operation of the gyro.

The controller commands the motor speed and regulates the gyro's precession rate and gimbal angle. This is accomplished by commands to a high response flow control valve in the hydraulic brake circuit that increases or decreases the brake pressure.

1.5 Inertia Measurement Unit (IMU)

The motion sensor suite in the IMU contains rate sensors that measure the angular movements of the vessel and accelerometers that measure the vertical and lateral boat movement. These signals are communicated to the ECM on a CANbus connection inside the gyro's wiring harness.

1.6 Brake

The brake mechanism consists of four hydraulic cylinders that attach to crank arms on the gyro gimbal shaft. The hydraulic cylinders are plumbed to a manifold / valve assembly so when the gyro rotates about the gimbal axis, oil from one side of each cylinder is pushed through the high response flow control valve into the same side of the other cylinder. The gyro controller modulates how fast the oil can flow through the control valve thus controlling the precession rate of the gyro.

The brake hydraulic circuit is a pre-charged closed loop – that is, there is no pump, motor or reservoir in the circuit. Accumulators are installed in the circuit so the pre-charge pressure does not increase as the fluid temperature rises due to the braking action. Locking solenoids are installed in the circuit to lock the gyro so it cannot precess if there is a leak in the circuit or a mechanical problem with the gyro.

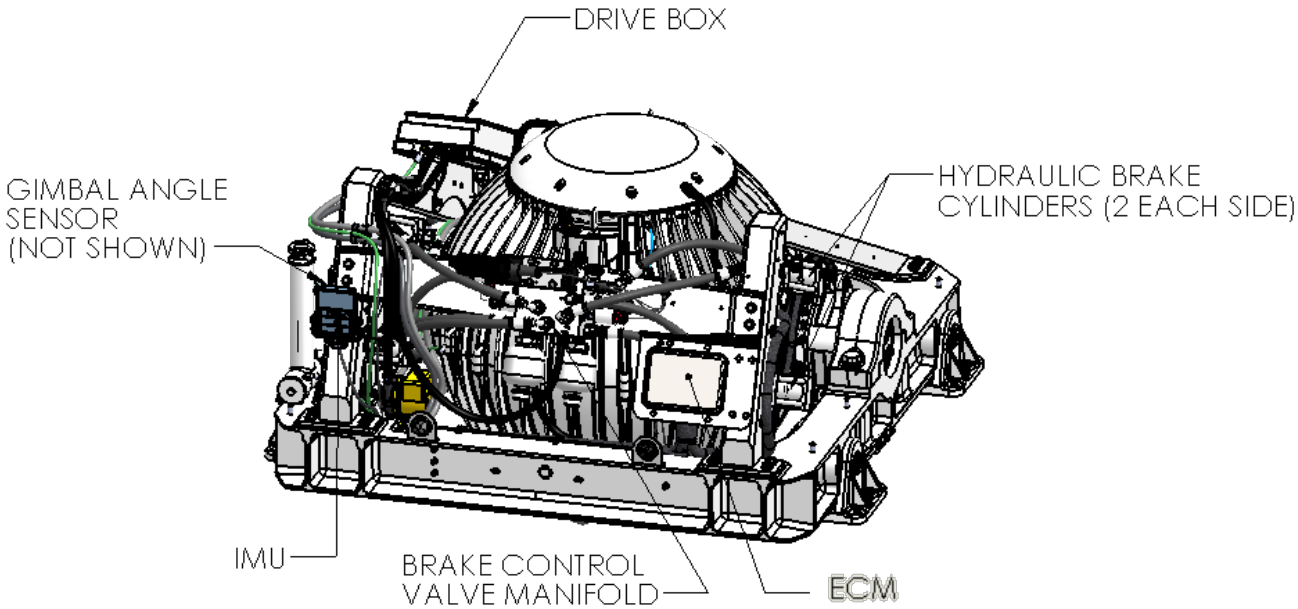

FIGURE 6 – BRAKE SYSTEM COMPONENTS

Gyro hydraulic Hand Pump Kit, P/N 10384, is required for servicing the brake system. Pressure should never be relieved unless this tool is available.

1.7 Cooling

The cooling circuit is a closed loop that supplies a glycol/water (50% distilled water and 50% glycol) mix to:

- The motor drive box to remove heat from the drive electronics
- The brake manifold to remove heat from the brake hydraulic circuit
- The gyro enclosure water jackets to remove heat from the flywheel bearings

The heated fluid then passes through a thermostat before bypassing or flowing through a heat exchanger that has sea water on the cold side. The circuit also contains a coolant reservoir for coolant expansion and to make filling easy. The reservoir contains a 7 psi (0.5 bar) pressure cap.

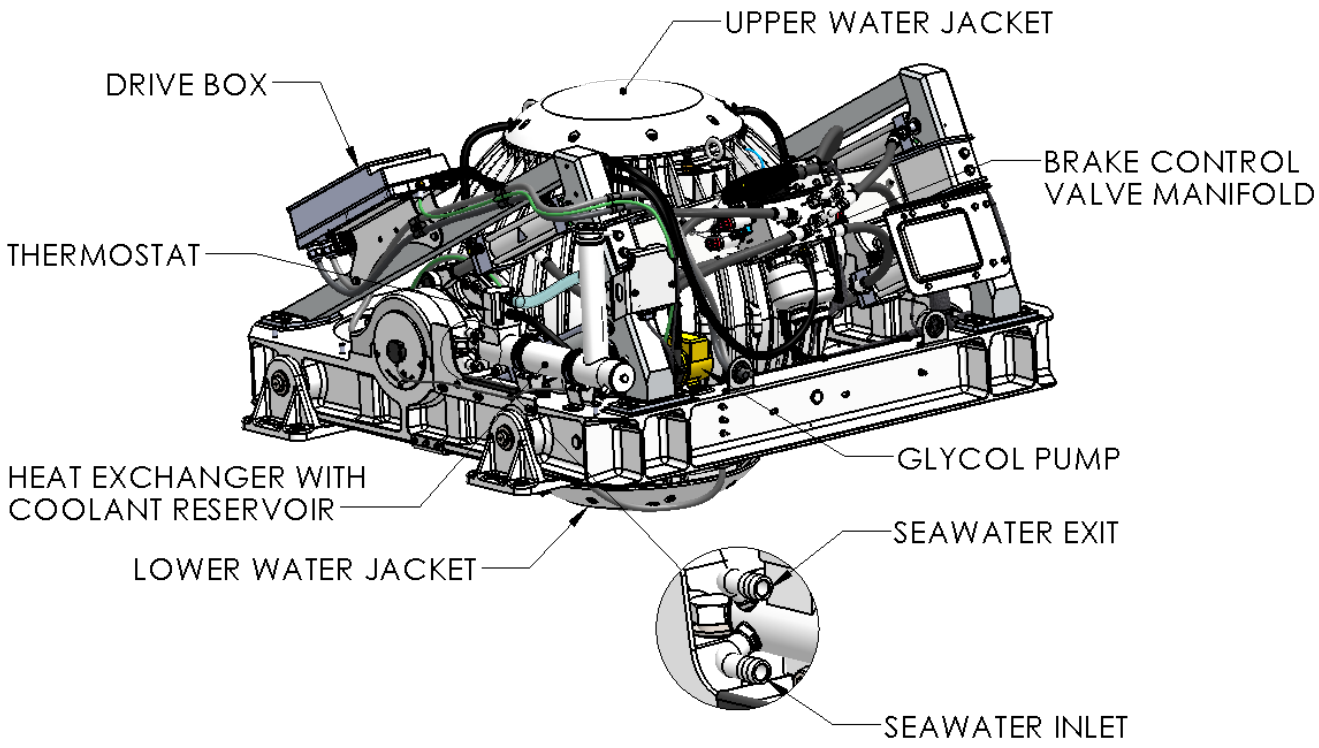

FIGURE 7 – COOLING SYSTEM COMPONENTS

PAGE INTENTIONALLY LEFT BLANK

2.0 Introduction

This section describes operation of the Seakeeper 26 Gyro system.

2.1 Display Screens: Overview

1) When 24 Vdc is applied to the Gyro the DISPLAY will power up and initialize. The SPLASH screen will be displayed

2) After the DISPLAY has initialized the HOME screen will be displayed

3) The DISPLAY has a set of five buttons that are under the BUTTON ICONS that appear on the display screen. The BUTTONS are the means for selecting the functions of the DISPLAY.

a. HOME Screen BUTTON function

i. GYRO ON/OFF and FAULT RESET

1. The ICON will change from red (GYRO OFF) to green (GYRO ON)
2. The ICON will turn red indicating the GYRO is off when a fault appears
3. When a FAULT occurs the BUTTON is used to reset the active fault

ii. GYRO LOCK/UNLOCK

1. When the GYRO control is initializing, or the GYRO off, the lock symbols will both be blue
2. When the GYRO is in LOCK mode, stabilization is off, the LOCK symbol will be red
3. When the GYRO is UNLOCK, stabilization is on, the UNLOCK symbol will be green

iii. DISPLAY DAY/NIGHT

1. Toggles the DISPLAY brightness between the Day and Night settings

iv. HOME SCREEN VIEW

1. Switches the HOME screen views from an animation screen, to a screen displaying arrows with no animation, to a screen that shows boat roll rate on a graph

Home Screen with Animation: Flywheel will be spinning and gyro stabilizing

Home Screen with Arrows for flywheel spinning and stabilizing

Home Screen indicating roll rate

v. SETTINGS SCREEN

1. Changes from the HOME screen to the SETTINGS screen

4) When the button is depressed for the SETTINGS screen the DISPLAY changes to the SETTINGS screen

a. SETTINGS screen BUTTON ICON functions

i. Allows the brightness of the DISPLAY to be increased or decreased. The brightness settings for the DAY or NIGHT modes can be independently adjusted by selecting the DAY or NIGHT on the main page before entering the SETTINGS screen.

1. When the button is depressed the BRIGHTNESS settings appears

2. The BRIGHTNESS is decreased or increased by depressing the MINUS button or the PLUS button

3. To navigate back to the SETTINGS screen the BACK button is depressed

ii. Adjusts the sleep function of the DISPLAY from one minute to 30 minutes or the DISPLAY screen on all of the time

1. When the button is depressed the DISPLAY SLEEP TIMER setting appears

2. The SLEEP TIME is decreased or increased by depressing the MINUS button or the PLUS button

3. To return back to the SETTINGS screen the BACK button is depressed

iii. Changes to the speed mode screen. See section 2.5 Boat Transit and Speed set point selection screen for more information.

iv. Changes the DISPLAY to the SERVICE screen

v. Returns the DISPLAY to the HOME screen

5) When the button is depressed for the SERVICE screen the DISPLAY changes to the SERVICE screen. The SERVICE screen displays the FAULT history of the GYRO

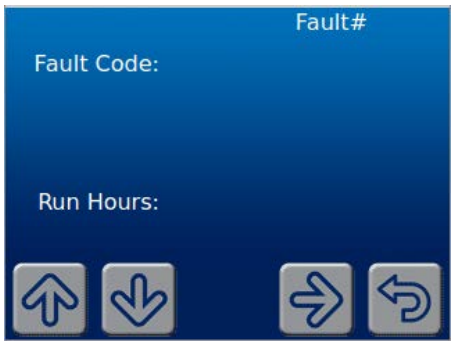

a. SERVICE screen BUTTON ICON functions

i. To scroll through the ALARM history the UP button and DOWN button are depressed

ii. To change to the GYRO information screen the NEXT button is depressed

iii. To change back to the SETTINGS screen the BACK button is depressed

6) The GYRO information screen displays the GYRO model, GYRO serial number, GYRO software version, DISPLAY software version, RUN hours, and SEA hours, the IMU software version as well as the PFC Inverter software version. The PFC inverter calibration Major, Minor and model information is also displayed in the following format: Major.Minor / model on the second Drive: software line. This screen also allows Seakeeper Service personnel access to additional service functions.

a. The RETURN button will return the DISPLAY to the SERVICE screen

2.2 Start-up

1) Make sure AC and DC power are available.
2) Turn on the boat's DC circuit breaker that supplies power to the Gyro.
3) Turn on the boat's AC circuit breaker that supplies power to the Motor Drive Box.
4) In most cases, the seawater pump will be wired to turn on when the Gyro or Motor Drive Box is turned on. However, in some cases the seawater pump is on a separate AC or DC circuit breaker and it is necessary to turn it on.
5) When the DC power is turned on the DISPLAY will initialize and the HOME screen will appear. If a FAULT is present an ALARM screen will appear.

To turn the GYRO ON depress the POWER ON/OFF FAULT RESET button, the button will turn GREEN, the flywheel will spin (or arrow appear), and a RED PROGRESS BAR will appear. The PROGRESS BAR indicates how soon the gyro will be available for stabilization. When the Gyro is initialized and when the GYRO is up to minimum operating speed the PROGRESS BAR will turn from RED to GREEN. At this point, the GYRO is available for stabilization.

6) When the GYRO reaches its maximum operating speed where maximum stabilization is available, the PROGRESS BAR will disappear and the GYRO is available for maximum stabilization.

2.3 Stabilization

For stabilization at sea or at anchor after GYRO is ON and at speed:

1) Press the LOCK/UNLOCK button. The button will turn GREEN indicating that the Gyro is precessing and stabilizing the roll motion. The stabilization mode starts gradually; it takes 5-10 seconds to reach full effectiveness.

If it is necessary to shutoff power to the flywheel motor and slow the flywheel for any reason, press GYRO ON/OFF button; the button will turn RED and the LOCK/UNLOCK button will turn RED indicating the command has been accepted. It takes approximately 6+ hours for the speed to drop to zero rpm.

If it is necessary to stop Gyro motion for any reason press the LOCK/UNLOCK button. The LOCK symbol will turn RED indicating that the Gyro is locked. Never attempt to work on the gyro until the flywheel has stopped spinning. In the event that the Gyro system has automatically locked the gyro due to an alarm or failure, no attempt should be made to bypass the alarm or automatic lock.

2.4 Normal Shut-Down

1) Verify that no alarms are on the Gyro display. The gyro should be stopped when pulling into port and stabilization is no longer required. This maximizes long term life as it allows the gyro to start the coast down cycle before cooling is shutoff. Once the vessel is secured in the slip and the crew has shut down the generator and engines, the AC and DC breakers that control the gyro should be switched to the OFF position. The gyro will continue to spool down to zero rpm. No cooling is required during this time.

2) Press LOCK/UNLOCK button. The LOCK symbol will turn RED

3) Press GYRO ON/OFF button. The ON/OFF symbol will turn RED

4) When the GYRO is turned off the flywheel is still spinning. When the flywheel has come to a complete stop 0 RPM will appear on the screen indicating that the flywheel has stopped. It can take up to 6+ hours for the flywheel to stop spinning.

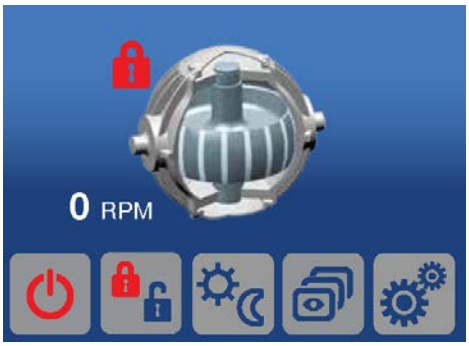

5) The boat's AC and DC circuit breakers that supply power to the gyro and sea water pump can be turned off.

The circuit breakers should be left on as long as possible while the gyro is spinning to remove heat from the gyro. During normal operation, the gyro should be stopped when pulling into port and stabilization is no longer required. This maximizes long term life as it allows the gyro to start the coast down cycle before cooling is shutoff. Once the vessel is secured in the slip and the crew has shut down the generator and engines, the AC and DC breakers that control the gyro should be switched to the OFF position. The gyro will continue to spool down to zero rpm. No cooling is required during this time. Note gyro will take 6+ hours to coast down to zero rpm from full speed. The Display will indicate 0 RPM when the flywheel has stopped.

2.5 Boat Transit Without Stabilization and Speed Adjustment

When cruising without gyro stabilization, run the gyro at 1000 rpm to maintain lubrication of the bearings. This ensures that the lubricant is not pushed out of the ball/raceway load zone over an extended period of time due to the accelerations associated with boat motion. If taken to an extreme, this can lead to a condition known as "false brinelling" which reduces bearing life. The Gyro will use less than 300 watts of AC power while operating in this mode.

Damage to the bearings and/or gyro due to non-conformance with this operational procedure may not be covered by warranty.

7) Press the SETTINGS button to move from the MAIN screen to the SETTINGS screen

8) Press the SPEED ADJUST button to adjust the gyro speed.

9) To scroll through the SPEED settings, press the UP button and DOWN button to highlight another speed.

10) Press the SET button to select the highlighted gyro speed. The selected speed will turn yellow. 1000 RPM is used for boat transit without stabilization. 5000 RPM is for normal stabilization. 4000 RPM allows stabilization at a reduced flywheel speed. When 24V power is removed from the gyro, the speed selection will revert to 5000 RPM.

11) To navigate back to the SETTINGS screen, the BACK button is depressed

12) Make sure AC power is available to the Gyro and use the GYRO ON/OFF to turn the gyro ON if it is not already on.

    a. The ICON will change from red (GYRO OFF) to green (GYRO ON)

13) When the GYRO is near the selected speed, the PROGRESS BAR will disappear and the GYRO will be ready to have stabilization enabled if 5000 RPM or 4000 RPM are selected.

PAGE INTENTIONALLY LEFT BLANK

3.0 Power Failures

There are two sources of power to the Seakeeper 26 Gyro:

- 24 Volts DC powers the Gyro Control Box for all the control electronics.
- 208 - 230 Volts AC powers the Motor Drive Box to drive the motor inside the Gyro.

These are supplied on Cables 1 and 2 which are shown on Seakeeper drawing 90310, Cable Block Diagram.

The Motor Drive Box contains hazardous voltage and the cover should not be removed while the flywheel is spinning and the AC input has been disconnected for at least 10 minutes. This high voltage exists even if the flywheel is coasting down and the supply voltage has been shut off.

3.1 +24 VDC Failure

The display will be blank. Gyro flywheel speed will decrease. The brake is locked (no precession).

- Verify the boat's circuit breaker supplying +24 VDC has not tripped and the AC breaker is On.

When +24 VDC is restored, the display will be powered up, Splash Screen will appear, and then Home Screen will appear.

- Press POWER ON/OFF

  The progress bar will appear and indicate Gyro flywheel speed. When Gyro flywheel is at minimum operating speed the progress bar will go away and stabilization will begin.

3.2 230 VAC Failure

If the AC power is not connected, a notification screen will indicate "AC Mains Low". If the failure is not corrected within two minutes, an "AC Mains Low" alarm will occur. The brake will lock and the gyro will stop moving if stabilization was on.

- Verify the boat's circuit breaker supplying 208-230 VAC to the Motor Drive Box has not tripped.

Once 208-230 VAC is restored:

- Press POWER ON/OFF to clear the alarm. Then press the POWER ON/OFF button again to continue gyro operation.

  The progress bar will appear and indicate Gyro flywheel speed. When Gyro flywheel is at minimum operating speed the progress bar will go away and stabilization will begin.

3.3 230 VAC Fluctuation, Spike or Momentary Failure

If the AC voltage to the Motor Drive Box is outside Seakeeper's specified range (208 – 230 VAC), the Motor Drive Box will briefly shut down for protection. The Motor Drive Box will continue operation when the voltage returns to the specified range.

A brief fluctuation can happen when the generator is unable to regulate its output voltage, particularly when a large AC load is switched on or off. A momentary AC failure also happens during transition from shore power to ship's power.

3.4 Alarms

The Gyro issues an alarm when it detects a malfunction that could cause damage or erratic operation. When an alarm occurs, the Gyro will stop and an alarm message is shown on the Display.

The alarm will not clear until the operator presses the POWER ON/OFF button and the alarm condition is no longer present. The operator can then press the POWER ON/OFF button again to continue gyro operation.

- A view of a typical ALARM screen.

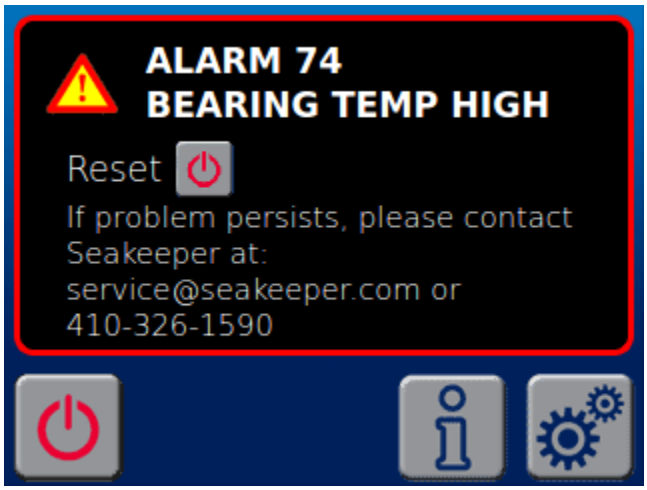

- If the ALARM appears and there is an INFORMATION button on the screen the ALARM has more information associated with it. By depressing the INFORMATION button the INFORMATION screen will appear.

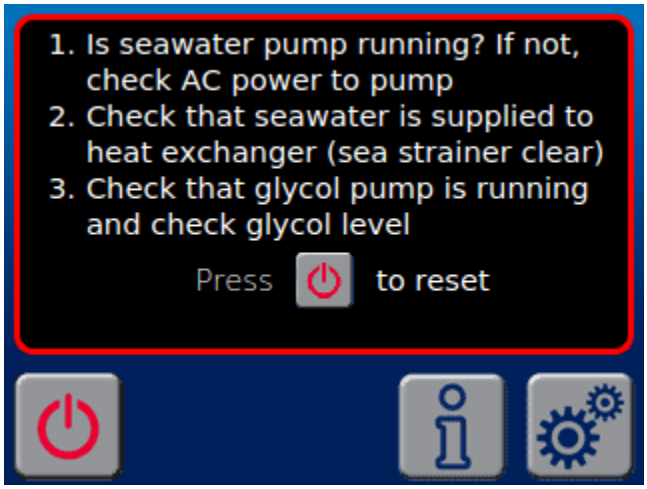

- To reset the ALARM utilize the GYRO ON/OFF button

3.5 Alarm and Warning History

The Service page on the Display shows the recent alarms and warnings. The alarms and warnings are in chronological order starting with the most recent. Warnings are for issues that do not affect gyro operation.

- From the Home Screen at the Display, go to SETTINGS screen by depressing the SETTINGS screen key and then go to the SERVICE screen by depressing the SERVICE screen key

- View the ALARMS and WARNINGS in the history by pressing UP and DOWN arrow keys.

4.0 MAINTENANCE

The gyro system is designed to require as little maintenance as possible. However, since the system is comprised of mechanical and electrical components that operate in a marine environment, some periodic inspections and maintenance are recommended. Seakeeper recommends an annual inspection and a 2000 hour service interval to keep the gyro running trouble-free.

If the gyro is installed in a wet space, efforts should be made to keep gyro free of salt residue from either condensation or direct exposure to salt spray. If exposed, a regular wipe down with mild soap and water with a rinse will help limit corrosion and keep the gyro assembly in good cosmetic condition. Refer to Service Bulletin 90106 for details.

The gyro comes standard with sealant and thread locker on applicable fasteners. When reinstalling all fasteners use thread locker and sealant unless otherwise specified.

4.1 REFERENCES

- Seakeeper 90025, Service Bulletin, Brake Bleeding
- Seakeeper 90026, Service Bulletin, Gyro Paint Information
- Seakeeper 90083, Service Bulletin, Gimbal Angle Sensor Replacement and Calibration
- Seakeeper 90106, Service Bulletin, Fresh Water Rinse Notice
- Seakeeper 90133, Service Bulletin, Gyro Annual Inspection Instructions
- Seakeeper 90134, Service Bulletin, Gyro 2000 Hour Service Instructions

4.2 PRECAUTIONS

- **Gyro Hydraulic Hand Pump Kit, Part No. 10384, is required for servicing the brake. Pressure should NOT be relieved unless this tool is available.**
- **Never charge the nitrogen charged accumulators with oxygen or shop air!**

4.3 PARTS AND SPECIAL TOOLS

Part No.	Description	Comments
10384	Gyro Hydraulic Hand Pump Kit	Required for all brake service tasks.
10449	Brake Bushing Replacement Tool Kit	Contains tools used for changing bushings on all model gyros.

4.4 SCHEDULED MAINTENANCE TABLE

- The following pages contain the scheduled maintenance table organized by systems: Mechanical, Hydraulic, Cooling, and Electrical.

SYSTEM / COMPONENT	TASK PER SERVICE BULLETIN 90133	INTERVAL	PARTS / SPECIAL TOOLS
Mechanical / Corrosion	Inspect unit for severely corroded areas and clean and touch up with paint. See Service Bulletin 90026.	Annual	
Hydraulic / Hoses	Check for cracks or chafing. If chafing found, reposition hose to provide clearance around hose. If chafing is severe, replace hose. Charge system per Service Bulletin 90025.	Annual	Hydraulic hand pump kit
Cooling / Zinc Anode	Replace zinc anode as needed.	With other zincs or Annual	
Cooling / Hoses	Check for cracks or chafing. If damaged, replace hose. Fill cooling system and purge air.	Annual	Anti-freeze
Cooling / Seawater side	Inspect heat exchanger for signs of leaks.	With other zincs or Annual	
Cooling / Seawater side	Fill with environmentally safe, marine anti-freeze during winter or periods of in-operation.	Winter	
Electrical / Connectors	Inspect all connectors for corrosion, replace if necessary.	Annual	
Electrical / Grounds	Inspect all ground points for corrosion, clean as necessary, and treat with corrosion inhibitor.	Annual	
Electrical / Gimbal Angle Sensor	Check calibration of sensor. See Service Bulletin 90083 for instructions.	Annual	
Electrical / Cables	Check all cables and wire harness branches for cracks or chafing. Take special attention to gimbal shaft areas.	Annual	
Electrical / Power Input	Check for seal at cable glands.	Annual	
Electrical / Motor Power	Check integrity of motor power cable jacket.	Annual	

SYSTEM / COMPONENT	TASK PER SERVICE BULLETIN 90134	INTERVAL	PARTS / SPECIAL TOOLS
Mechanical / Hydraulic Brake	Replace brake bushings, hydraulic accumulators and check valves, and flush hydraulic oil.	2000 hrs	Hydraulic hand pump kit, Brake bushing replacement tool kit, Hydraulic brake parts kit
Cooling / System	Cooling system flush	2000 hrs	Fill reservoir or jug and tubing, antifreeze

PAGE INTENTIONALLY LEFT BLANK

5.0 WARRANTY, LIMITATION OF LIABILITY, PROPERTY RIGHTS

5.1 WARRANTY

The complete Seakeeper warranty details may be found on the Seakeeper website www.seakeeper.com

Seakeeper warrants that the Goods sold hereunder are free from defects in material and workmanship. This warranty is for the following period, whichever occurs first:

a. 36 months from the date of shipment from SEAKEEPER factory

b. 24 months from date the product put into service, which shall conclusively be presumed to be the date of sale of a vessel, on which a SEAKEEPER product is installed, to a retail customer or date put into service on an existing vessel (refit).

c. Or, 2000 (two thousand) hours of use, subject to verification and confirmation by SEAKEEPER, INC.

This warranty does not cover normal wear and tear or preventative maintenance of the following components or costs associated with their failure:

a. Heat exchanger
b. Brake Bushings
c. Zinc Anodes
d. Normal preventive maintenance and scheduled component inspections/replacements as specified in the SEAKEEPER operation and maintenance manual including:
    i. Annual Inspections
    ii. 2000 hour maintenance / service
    iii. Zinc anode replacement

This express warranty is in lieu of and excludes: ALL OTHER WARRANTIES, EXPRESSED OR IMPLIED, BY OPERATION OF LAW OR OTHERWISE INCLUDING WARRANTIES OF MERCHANTABILITY OR FITNESS FOR A PARTICULAR PURPOSE (WHETHER KNOWN TO SELLER OR NOT), AND ALL OTHER SUCH WARRANTIES ARE HEREBY EXRESSLY DISCLAIMED BY SELLER AND WAIVED BY CUSTOMER/END USER. SEAKEEPER, INC. SHALL IN NO EVENT BE LIABLE TO ANY SPECIAL, DIRECT, INDIRECT, INCIDENTAL OR CONSEQUENTIAL DAMAGES FOR BREACH OF ANY WARRANTY OR OTHER OBLIGATION ARISING OUT OF THE SALE OF THE PRODUCTS, OR FROM THE USE OF THE PRODUCTS OR ANY INABILITY TO USE THE PRODUCTS.

Written notice of claimed defects shall have been given to Seakeeper within the Warranty Period, and within thirty (30) days from the date any such defect is first discovered. The Goods or parts claimed to be defective must be returned to Seakeeper, accompanied by a Return Authorization (RA) issued by Seakeeper's facility responsible for supplying Goods, with transportation prepaid by Buyer/User, with written specifications of the claimed defect.

If a warranty claim is valid, SEAKEEPER, INC. will repair or replace the Product, or part of the Product, proven to be defective, at its sole discretion, in a timeframe provided by SEAKEEPER, INC., on a reasonable best effort basis.

Under no circumstances shall Seakeeper be liable for removal of Seakeeper's Goods from Buyer's/User's equipment or re-installation into Buyer's/User's equipment. No person including any agent, distributor, or representative of Seakeeper is authorized to make any representation or warranty on behalf of Seakeeper concerning any Goods manufactured by Seakeeper.

5.2 LIMITATION OF LIABILITY

NOTWITHSTANDING ANYTHING TO THE CONTRARY, SEAKEEPER SHALL NOT BE LIABLE FOR ANY SPECIAL, INCIDENTAL, INDIRECT OR CONSEQUENTIAL DAMAGES INCLUDING BUT NOT LIMITED TO LOST PROFITS ARISING OUT OF THE PERFORMANCE, DELAYED PERFORMANCE OR BREACH OF PERFORMANCE OF THIS ORDER REGARDLESS WHETHER SUCH LIABILITY BE CLAIMED IN CONTRACT, EQUITY, TORT OR OTHERWISE. SEAKEEPER'S OBLIGATION IS LIMITED SOLELY TO REPAIRING OR REPLACING (AT ITS OPTION AND AS SET FORTH IN SECTION 5), AT ITS APPROVED REPAIR FACILITY, ANY GOODS OR PARTS WHICH PROVE TO SEAKEEPER'S SATISFACTION TO BE DEFECTIVE AS A RESULT OF DEFECTIVE MATERIALS OR WORKMANSHIP, IN ACCORDANCE WITH SEAKEEPER'S STATED WARRANTY. IN NO EVENT SHALL SEAKEEPER'S LIABILITY EXCEED THE TOTAL PURCHASE PRICE SET FORTH IN THIS ORDER.

5.3 PROPERTY RIGHTS

Except where otherwise expressly agreed, all patterns, tools, jigs and fixtures, drawings, designs, software and other materials and data developed, fabricated by Seakeeper shall be and shall remain Seakeeper's property. Except as specifically provided for in the order, Buyer shall have no right in any technical data, Intellectual Property Rights, and computer software associated with the order. Buyer shall not use or permit the use of the Goods that in any way could result in the disclosure of Seakeeper's proprietary information.

Seakeeper 26 Gyro Specifications & Summary

Rated RPM	5,000 RPM
Angular Momentum at Rated RPM	26,000 N-M-S
Anti-Rolling Torque at Rated RPM	56,000 N-M
Spool-up Time to Rated Speed (5000 RPM)	50 minutes
Spool-up Time to Stabilization (4250 RPM)	30 minutes
Spool-up Power	
AC Motor	5000 Watts Max
DC Motor	240 Watts
Operating Power	
AC Motor (Sea state dependent)	1000-5000 Watts
DC Control	240 Watts
Voltage	
AC Input	208-230 VAC (±10%), 50/60 Hz, Single Phase
DC Input	24 VDC @ 10 Amps
Sea Water Supply to Heat Exchanger	30 LPM (8 GPM) maximum 15 LPM (4 GPM) minimum
Ambient Air Temperature	0° - 60° C (32° - 140° F)
Weight	1383 kg. (3050 lbs.) bolt-in installation
Envelope Dimensions	1.34 long x 1.42 wide x 1.03 high (meters) 52.7 long x 55.9 wide x 40.4 high (inches)
Noise Output	Steady state noise measured in the factory at a 1 meter distance measures 72 – 74 dBC.

Arrangement

The Seakeeper 26 Gyro consists of the Flywheel, Enclosure, Foundation, Electronics, Brake, Cooling, and Cover Subsystems.

Installation Location

The Gyro is a torque device and does not have to be installed in a specific hull location or on the centerline. However, the Gyro should not be installed forward of the longitudinal center of gravity in a planing vessel where the vertical accelerations exceed ±1 G.

Mounting Dimensions

See Seakeeper Drawing 90271 for bolt-in installation details.
See Seakeeper Drawing 90272 for bond -in installation details.

Loads

The installer is responsible for designing the foundation to which the Gyro is attached and for ensuring that this foundation can safely transfer the concentrated Gyro loads from the frame to the adjacent hull structure. Loads that the Gyro imposes on the hull structure are explained on Seakeeper Drawings 90271 and 90272.

Cooling

The Gyro bearings, Motor Drive Box, and hydraulic manifold are cooled by a closed water / glycol mix cooling loop that incorporates a sea water heat exchanger. The installer is responsible for providing 15 – 30 lpm (4 – 8 gpm) raw water at ambient sea temperature and 1.4 Bar (20 psi) maximum pressure to the heat exchanger.

Electrical

The installer is responsible for supplying 208-230 VAC, 50/60 Hz, single phase power on a 20A service to the Motor Drive Box and 24 VDC @ 10A service to the Gyro Control System. Separate circuit breakers should be used for each Motor Drive Box in multiple gyro installations. Similarly, separate circuit breakers should be used for each Gyro Control System in multiple gyro installations.

Operator Controls

A Display with integrated Keypad is used to start, operate, monitor, and shutdown the Gyro.

Performance

Gyro reduction of boat roll is a function of the boat's displacement, transverse metacentric height (GM_T) and hull damping as well as the operating conditions (speed and heading with respect to waves) and sea state. The Gyro controller regulates the active hydraulic brake to ensure the Gyro's anti-roll torque is maximized irrespective of hull characteristics or operating conditions.

Alarm and Monitoring

Sensors, alarms and shutdowns are provided to allow unattended operation. Sensors measure gyro and drive temperatures, vacuum pressure, gimbal angle, brake pressure, and ship motion. The Gyro controller sends sensor values and alarm information to the display and also locks the brake and shuts down the motor drive in the event of an alarm condition. Gyro operating history during faults or alarms is recorded in the controller's memory for subsequent recall if service is needed.

Safety

The brake automatically locks the Gyro so it cannot generate excessive anti-rolling torque loads in the event of a system fault or alarm, loss of electrical power or loss of brake pressure. The brake can be locked from the Display or by shutting off power locally at the Motor Drive Box or Gyro Control System.