REV.	ECN NO.	ZONE	DESCRIPTION	DATE	DRAWN	APPROVED
1	908		INITIAL RELEASE	09SEP2021	ZGY	TMD
2	908		REMOVED CONNECTBOX COMPONENTS, ADDED 5" DISPLAY CABLES AND 90447 QUICK START GUIDE, REPLACED TOP PANEL 12620 WITH 13097.	22AUG2022	RMF	ZGY
3	1059		ADDED: 12620, 40992, 90731, 90569, DELETED: 13097, 30244, 90336, 60485, 40238, 30301, 30249, 30295, 90447, QTY CHANGE: 60484 WAS 2, 60822 WAS 2.	24APR2023	RMF	ZGY
4	1112		ADDED: 30246 AND 30247. DELETED: 12125	10OCT2023	RMF	BRD
5	1194	A2, F5	CHANGE: THE TOP LEVEL ASSEMBLY 12614 INCORPORATED THE MODIFICATIONS OF THE UPPER FOUNDATION ASSEMBLY 12613	24JUL2024	CLF	BRD

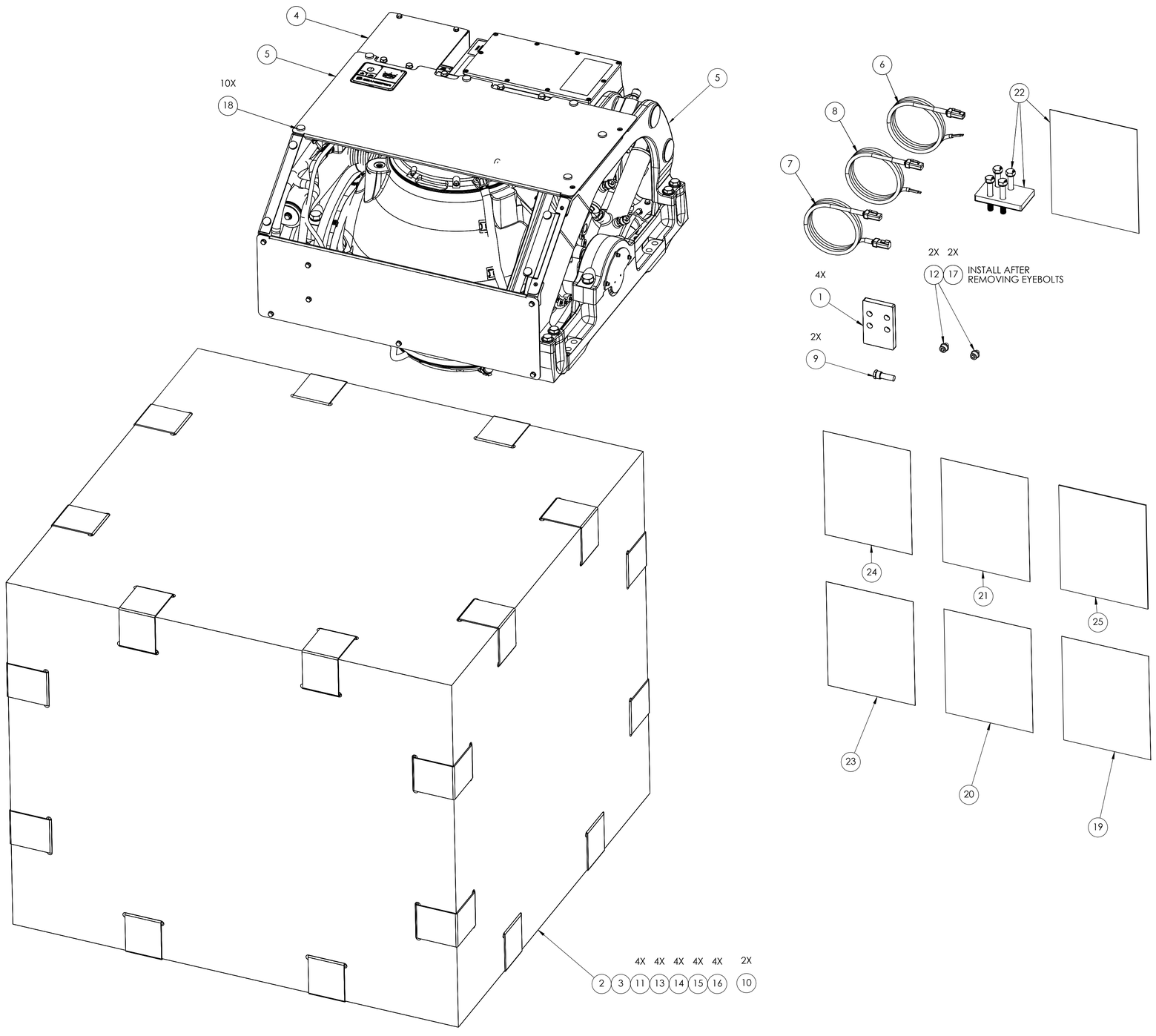

ITEM NO.	PART NO.	DESCRIPTION	QTY.
25	SEAK209	OWNER'S GUIDE KIT	1
24	90731	ELECTRONIC MANUAL DOCUMENT	1
23	90569	SEAKEEPER CONNECTBOX AND APPLICATION CONTROLLER	1
22	90400	BLIND-HOLE KIT	1
21	90395	PACKING LIST	1
20	90369	CRATE UN-PACKING INSTRUCTIONS	1
19	90329	BOLT-IN CLEARANCE DOCUMENT	1
18	60834	PLASTIC PUSH PIN, 8 MM	10
17	60822	SCREW, SKT HD CAP, M10-1.5 X 12 MM LG	4
16	60682	WASHER, 0.375 IN. SCREW SIZE, 1.0 IN. OD, YELLOW ZINC	4
15	60680	SCREW, HEX HD CAP, 0.375-16 X 3.5 LG, GR 5	4
14	60679	LAG SCREW, 0.5 IN. DIA X 7 IN. LG	4
13	60678	WASHER, 0.375 SCREW SIZE, 0.406 IN. ID X 1.0 IN. OD, NYLON	4
12	60484	WASHER, FLAT, 0.75 OD X 0.375 ID X 0.062 THK	4
11	60359	WASHER, 0.5 SCREW SIZE, 1 1/16" OD, STEEL	4
10	40992	SEAKEEPER QUALITY TILT INDICATOR	2
9	40446	ZINC ANODE, 3/8" NPT PLUG, 1/2" DIA X 1.25" LG	2
8	30327	SEAWATER PUMP DC POWER CABLE ASSEMBLY, 5 M MFLG.	1
7	20334	SEAWATER PUMP DC POWER CABLE ASSEMBLY, 5 M LG.	1
6	20248	DC INPUT POWER CABLE ASSEMBLY, 5 M LG.	1
5	12620	TOP PANEL	1
5 △ 4	12614	TOP LEVEL ASSEMBLY	1
3	12268	COLLAPSIBLE SHIPPING CRATE	1
2	12134	SHIPPING CRATE COMPONENTS	1
1	11241	FOUNDATION SPACER	4

PROPRIETARY AND CONFIDENTIAL
THE INFORMATION CONTAINED IN THIS DRAWING IS THE SOLE PROPERTY OF SEAKEEPER INCORPORATED. ANY REPRODUCTION IN PART OR AS A WHOLE WITHOUT THE WRITTEN PERMISSION OF SEAKEEPER IS PROHIBITED.

THIS DRAWING SUPERSEDES ALL OTHER FILE FORMAT TYPES UNLESS OTHERWISE SPECIFIED

DO NOT SCALE DRAWING

3rd ANGLE PROJECTION

WEIGHT - LBS : ---

MATERIAL: ---

SEAKEEPER
Seakeeper Inc. 45310 Abell House Lane, Suite 350 California, MD 20619

DESCRIPTION: SEAKEEPER 5/6 CRATED ASSEMBLY, SERVICE REFERENCE

DRAWING NO:	REV NO:	SCALE:	SHEET NO:
12615-SP	5	1:5	1 OF 1